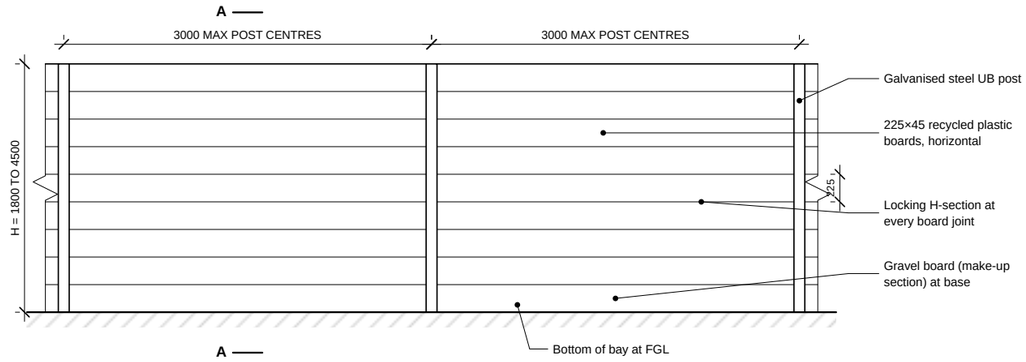

EC-01 TYPICAL FRONT ELEVATION

SCALE 1:50

NoiseBloc™ Eco Acoustic Barrier

ATF Supplies Nationwide Ltd · 01264 366211 · atfsuppliesuk.com

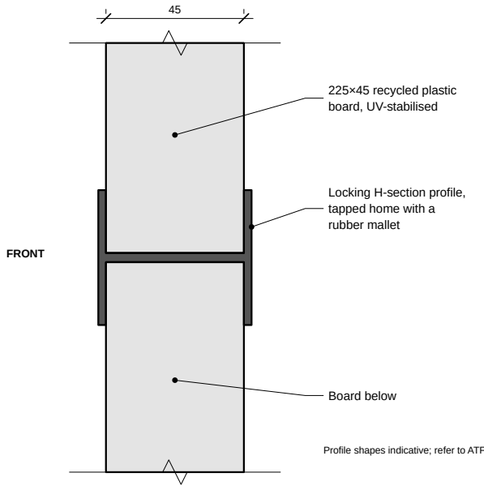

EC-04 BOARD JOINT (SCHEMATIC)

SCALE 1:2

NoiseBloc™ Eco Acoustic Barrier

ATF Supplies Nationwide Ltd · 01264 366211 · atfsuppliesuk.com

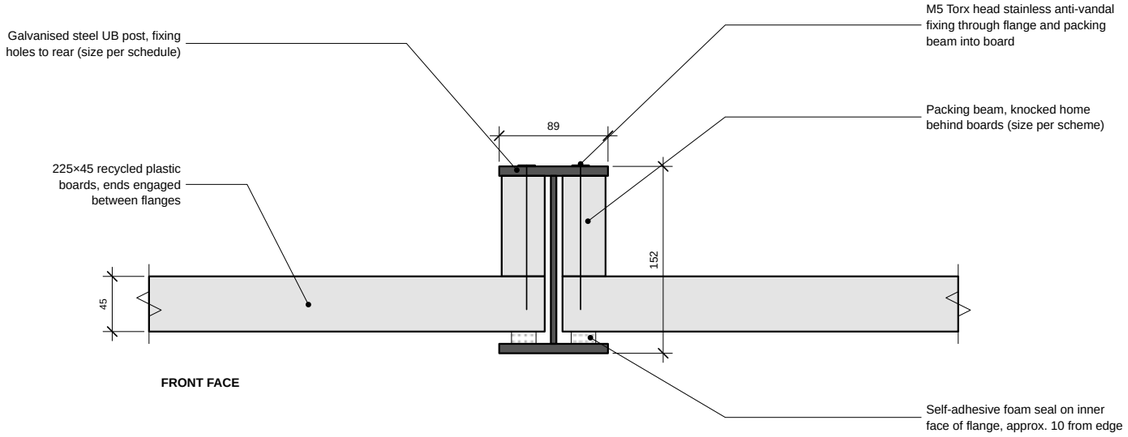

EC-03 PLAN AT INTERMEDIATE POST

SCALE 1:5

NoiseBloc™ Eco Acoustic Barrier

ATF Supplies Nationwide Ltd · 01264 366211 · atfsuppliesuk.com

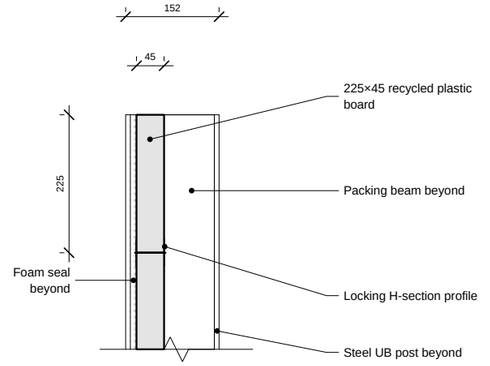

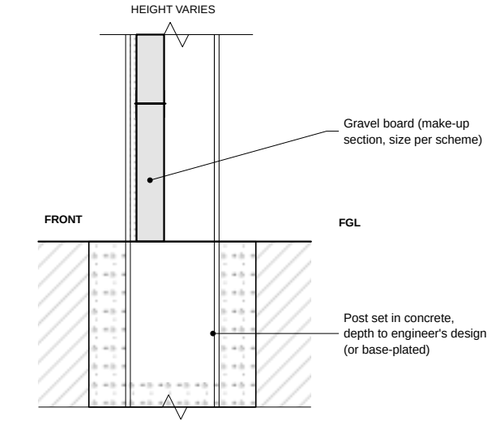

EC-02 SECTION A-A THROUGH BAY

SCALE 1:10

NoiseBloc™ Eco Acoustic Barrier

ATF Supplies Nationwide Ltd · 01264 366211 · atfsuppliesuk.com

GENERAL NOTES

1. All dimensions in millimetres. Do not scale from this drawing.
2. Typical details only. Barrier height, post sizes and setting out to project drawings.
3. Acoustic performance declared to BS EN 14388:2005: Reflective DL_R 26dB; Absorptive DL_R 30dB, DL_α 9dB (BS EN 1793-1 and -2). Superficial mass 13.2kg/m² reflective, 14.5kg/m² absorptive (dry).
4. 225×45 recycled plastic boards (95% recycled content, UV-stabilised) laid horizontally between steel UB posts at 3000 maximum centres. Installed post centres must not exceed the design centres.
5. Locking H-section profile at every board joint. Gravel board (make-up section) at the base of every bay, size per scheme; bottom of bay at finished ground level.
6. Self-adhesive foam seal on the inner face of the front post flange, approx. 10 from the flange edge, applied to clean, dry steel immediately before boarding.
7. Packing beams knocked home behind the boards and fixed through the rear flange with M5 Torx head stainless steel anti-vandal fixings into the boards. Post fixing holes to the rear.
8. Posts hot-dip galvanised steel UB to BS EN ISO 1461. Post shown 152×89×16 UB; size from the manufacturer's post schedule or the structural engineer's design. Foundations (concrete or base plate) to the engineer's design.
9. Absorptive boards use the same post, seal and fixing details, absorptive face to the noise source.
10. Read with NoiseBloc™ Eco technical datasheet NB-TDS-ECO.

NoiseBloc™

Engineered Acoustic Barriers.

NoiseBloc™ Eco

Standard details

DRAWING NO. NB-ECO-SD01	REV A	DATE 28.10.2026
SCALE As shown @ A3		SHEET 1 of 1

ATF Supplies Nationwide Ltd
Boundary House, 36a Walworth Road, Walworth Business Park, Andover, Hants SP10 5LH
T 01264 366211 · sales@atfsuppliesuk.com · atfsuppliesuk.com

© ATF Supplies Nationwide Ltd. NoiseBloc™ is a trademark of ATF Supplies Nationwide Ltd. These details may be reproduced in project documents. CAD (DXF) available on request.